New Digital Monochromator Stabilization System (MOSTAB)

A. Kalaydzhyan[1,2], T. Laurus[1], M. Tolkiehn[1]

[1] *Deutsches Elektronen-Synchrotron DESY, Notkestr. 85, D-22607 Hamburg, Germany*
[2] *Department of Physics, University of Hamburg, Jungiusstr. 9, D-20355 Hamburg, Germany*

A monochromator stabilizer (MOSTAB) is a feedback control system for double crystal monochromators used in synchrotron radiation beamlines. The main goal of a MOSTAB is to provide the possibility to continuously and automatically correct the detuning angle between the crystals.

Such a tool is already in use for a long time in different synchrotron centers, but constantly growing requirements in this area lead to the necessity to make a new generation of MOSTABs, especially for the PETRA III extension.

Originally a MOSTAB was used in two ways [1]: to fix the intensity of the output beam during the time of an experiment or to fix the ratio between intensities of "incident" (DORIS current) and monochromatic beam.

As shown in the figure 1 the MOSTAB analyzes intensities of the beam before and after the monochromator. If a correction is required, a MOSTAB adjusts the detuning angle between the monochromator crystals [2] by a piezo actuator. This is used to cut off higher harmonics in the X-ray beam.

The new digital MOSTAB has all these functions. It operates without manual user adjustments. It is possible to change operational parameters from the beamline PC via USB.

The new supplementary function of Digital MOSTAB is the quick scan of double-crystal rocking curve triggered via USB during the stabilization process. This feature can be used in long energy scans to keep the detuning constant in the whole scan range.

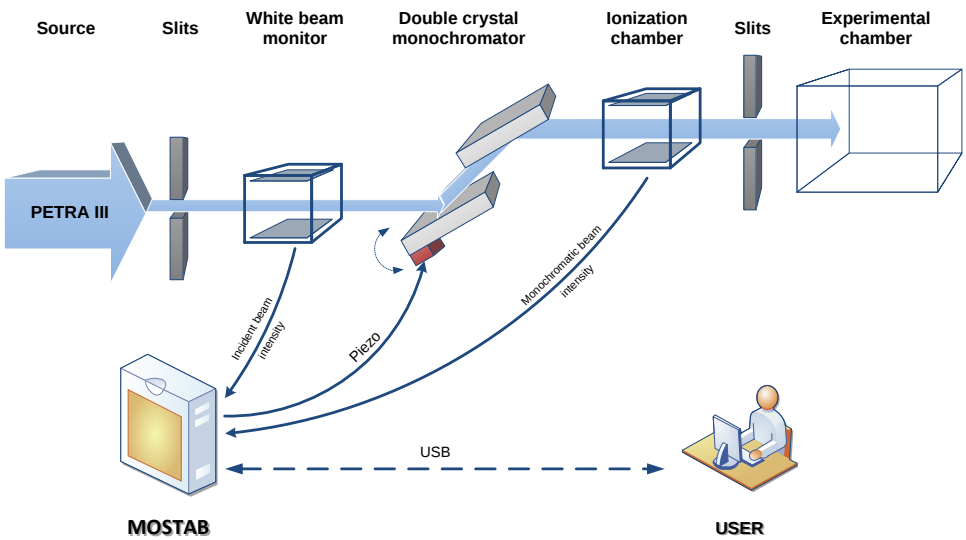

Figure 1: Schematic experimental arrangement

The prototype of new Digital MOSTAB was made in 2011 to try new electronic design and stabilization algorithm and was successfully tested at DORIS III beamlines: D3 (during user operation), BW1, BW2 and E2. Even the prototype showed the stability comparable to analog MOSTAB and in the same time had features, which were impossible in former versions of MOSTAB.

The Digital MOSTAB should be a reproducible device, therefore it was important to build the full design of MOSTAB electronics for the final version. The figure 2 *(left)* shows the overall structure of the Digital MOSTAB electronics. This design is based on Spartan-6 FPGA and has four ADC-channels (18-bit resolution) and two DAC-channels (16-bit resolution) with maximum sampling rates of almost 1 MSPS, so it is in principle possible to drive the second DAC output and rotate both crystals by piezo actuators. In this case it will be possible to use MOSTAB in quick energy scans (e.g. QEXAFS).

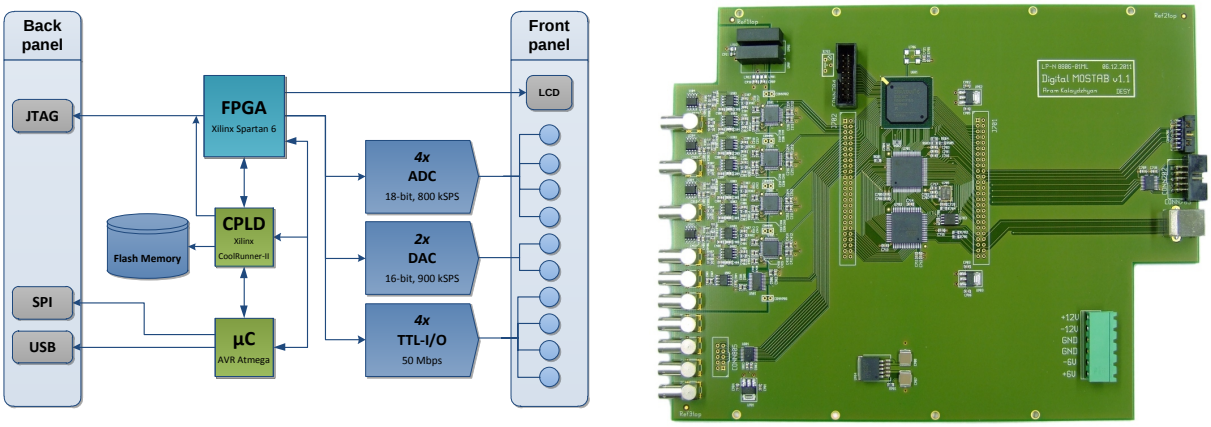

Figure 2: (left) The structure of MOSTAB electronics. (right) Digital MOSTAB board, case removed.

Several new Digital MOSTABs are already produced, and will be tested in April, 2012. It is also important to note that the hardware of a Digital MOSTAB can be used in the future as a multifunctional platform with digital and analog IOs by changing of FPGA firmware.

References

[1] A. Krolzig, G. Materlik, M. Swars, J. Zegenhagen, Nucl. Instr. and Meth., 219 (1984), p.430

[2] André Authier, Dynamical Theory of X-Ray Diffraction, IUCr (2003)